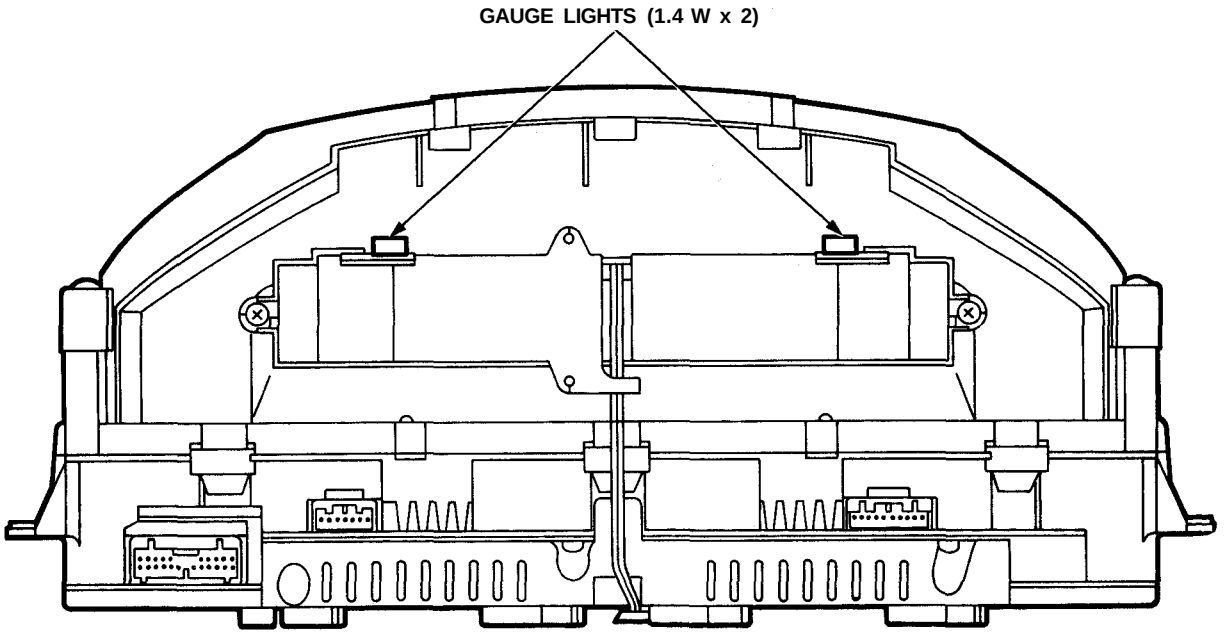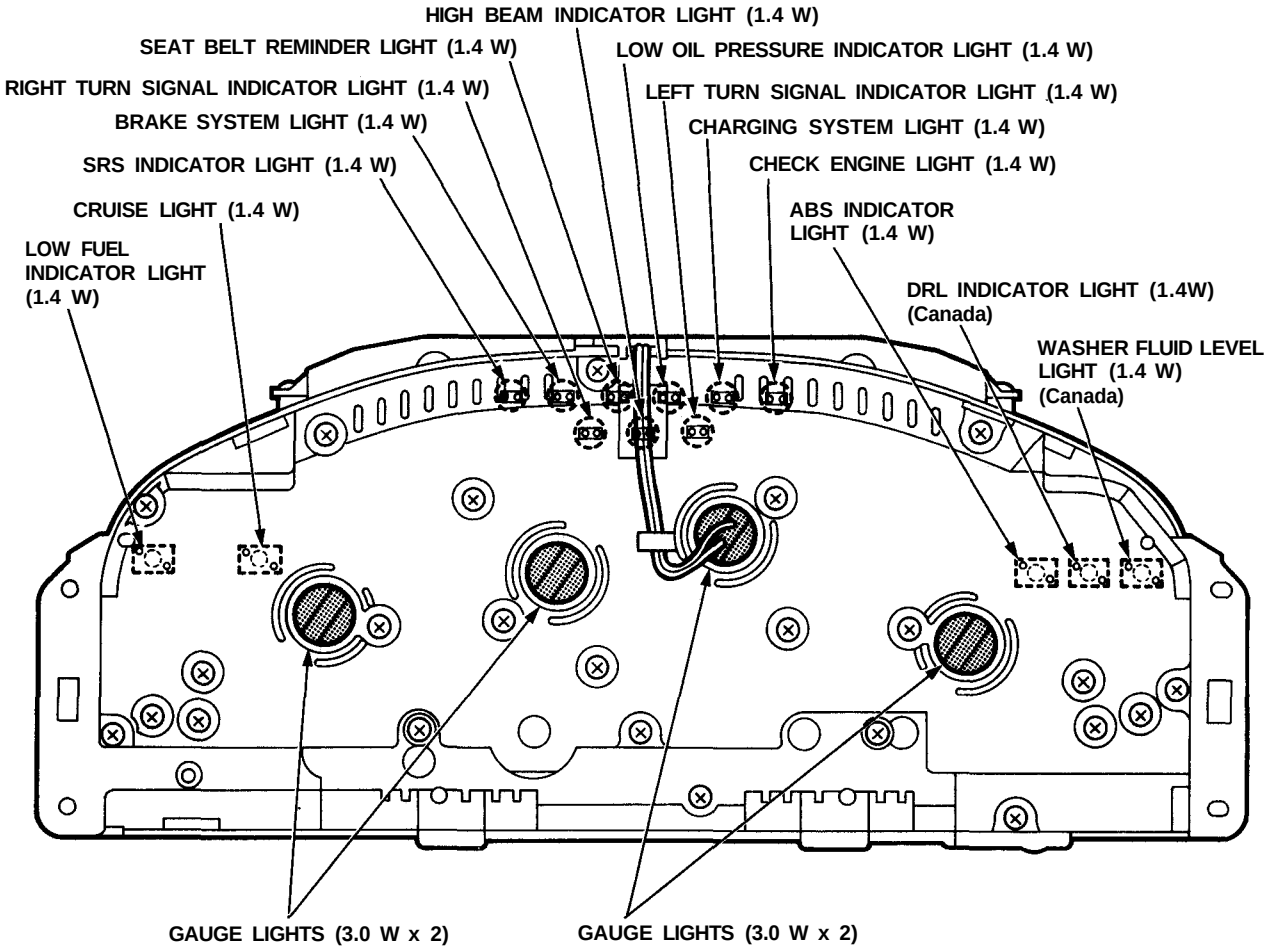Bulb Locations